INSTANT HOT SYSTEM

INSTALLATION INSTRUCTION & OWNER'S MANUAL Ver3.1

APEC WATER

www.FreeDrinkingWater.com

All Rights Reserved © APEC Water Systems

Please read and become familiar with the instructions before proceeding with the installation.

Before Installation:

Inspect the system:
Please take the system and all the components out of box. Inspect the system and all the connection fittings carefully, making sure everything is in good condition during shipping. If any part is broken, please do not proceed with the installation and contact APEC or your distributor for an exchange or diagnosis.

General Installation/Operation/Maintenance Requirements

- Installation needs to comply with state and local laws and regulations.
- Do not use with water that is microbiologically unsafe or of unknown quality without adequate disinfection before or after system.
- Recommended tool: end nipper.

Installing the Instant Hot System with RO System

A). Installing the instant hot system with the RO System

If you are installing the instant hot system with the RO system together please follow the RO system manual for RO setup. **When you get to Step 4: Mounting The Faucet, please follow the steps indicated in this manual.**

B). RO system already installed previously, you need to change to Hot & Cold Faucet

Turn **OFF** cold water supply to RO system, and turn **OFF** tank's ball-valve. Lift up RO faucet lever briefly to relief the built-up pressure inside the RO system, remove current RO faucet, and replace with a new hot & cold faucet, then follow the steps indicated in this manual.

Copyright:
This manual is copyrighted by APEC Inc. Under the copyright laws, this manual may not be reproduced in any form, in whole or part, without the prior written consent of APEC Inc. Manual print ver. 3.1, 2021Sep.

Components included with the Instant Hot System:

Make sure you have all these parts before starting installation.

1 Instant Hot Tank

Tank Mounting Bracket

Quick Connect Fitting 1/4"

Quick Connect Fitting w/ Filter and Cap (for installation without RO System)

Optional parts below come with APEC Hot & Cold Faucet or Hot Water Faucet only.

Hot Water Tube Lock Clip

Hot Water Tube Connector

Sleeve

Nut

Recommended Products

Hot & Cold Water Faucet

or

Hot Water Faucet

Suggested Products

RO System

or

5-TCR-QC

RO SYSTEM / HOT & COLD FAUCET / INSTANT HOT CONNECTION DIAGRAM

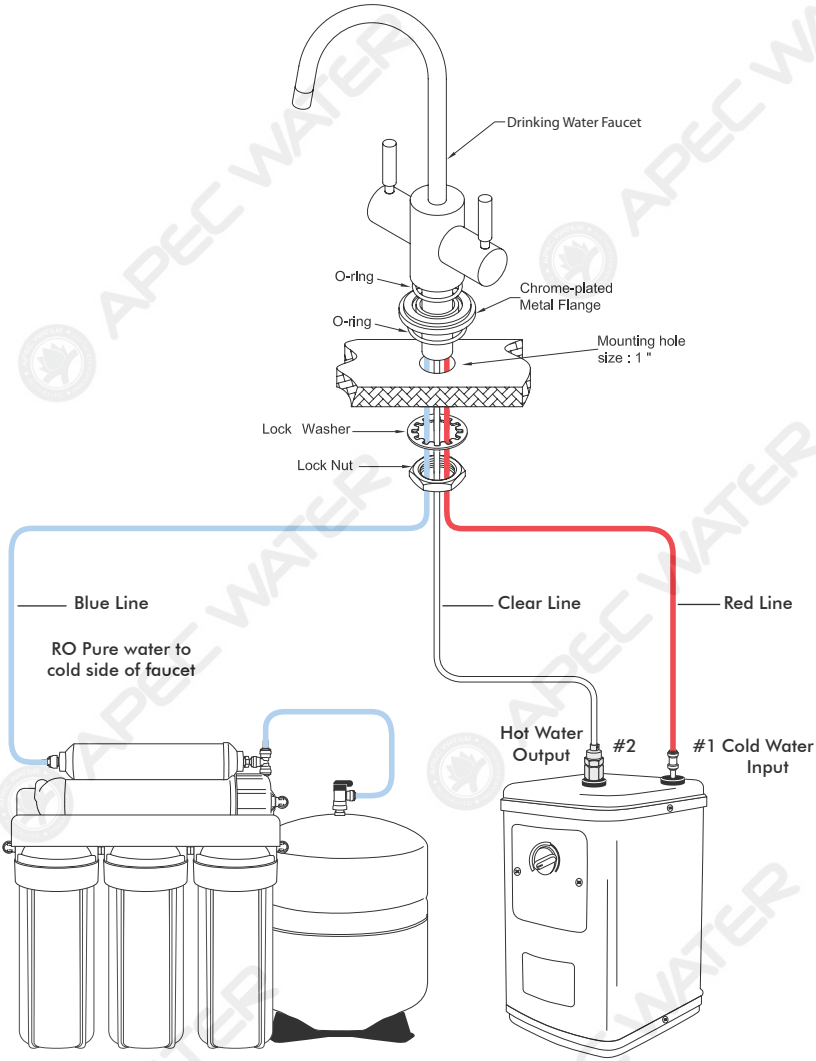

INSTALLING THE INSTANT HOT WATER SYSTEM WITH APEC HOT & COLD FAUCET

* Hot & Cold Fauce already installed into counter.

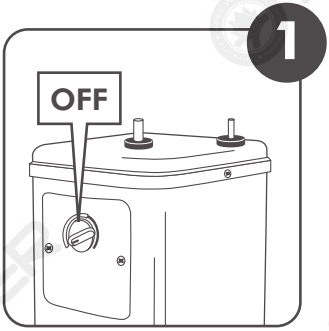

Step 1:

Be sure the dial on the instant hot system is in **OFF** position during installation.

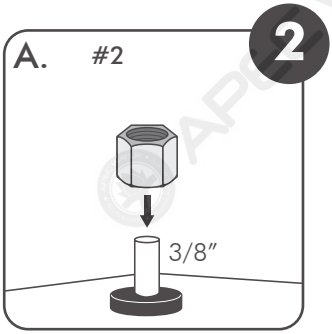

Step 2 A:

Install nut on the hot water tubing connector.

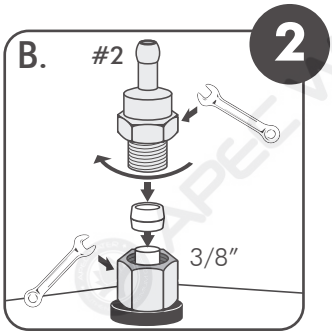

Step 2 B:

Hold bottom nut using one wrench and screw #2 by hand first then securely tighten with 2nd wrench.

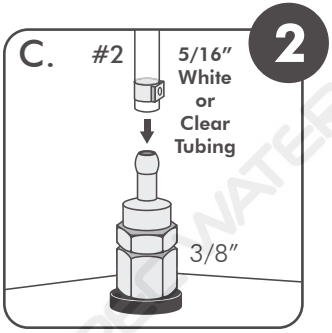

Step 2 C:

Slide hot water tube locking clip upwards into the 5/16″ clear tubing and connect tubing to hot water tubing connector.

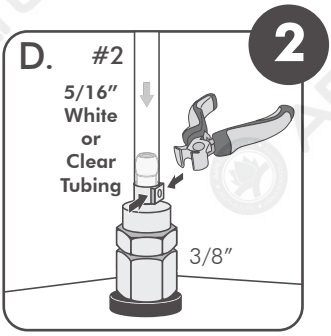

Step 2 D:

Use end nipper tool to squeeze both ends of the hot water tube locking clip to secure the hot water tubing connection.

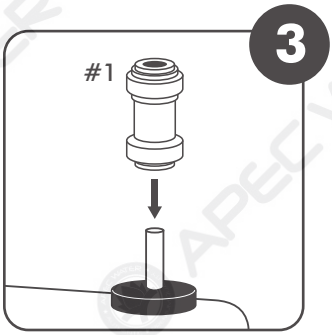

Step 3: Connect #1 quick connect fitting to system inlet

Remove black cap on system inlet first. Take the #1 quick connect fitting and connect it to the inlet tube located on top corner of the instant hot system. Push as far as you can and gently pull back to make sure the connection is secure.

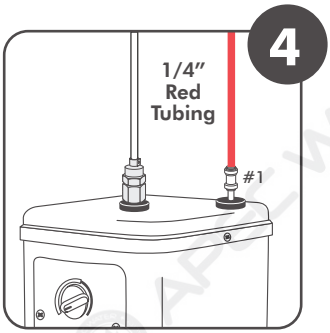

Step 4: Connect faucet to instant hot system inlet

Connect the 1/4″ faucet line or red tubing to the rear tube inlet at the top corner of the tank with the #1 quick-connect fitting. Push line straight into quick-connect fitting as far as possible and gently pull back to make sure the connection is secure.

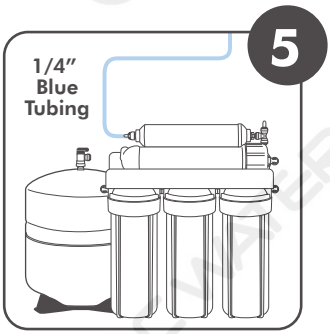

Step 5: Connect faucet to cold water source or APEC RO Water System

Connect the cold water tubing or the 1/4″ blue tubing from the faucet to product water from the RO system.

Step 6: Check for leaks

A). Installing the instant hot system with the RO System

Please refer back to RO system manual to finish RO system set up. When you get to **Step 6: System Start-Up** also check for leaks for the instant hot system.

B). RO system already installed previously

Turn on cold water supply to RO system, turn on the tank ball valve on the RO tank and turn faucet on to fill the instant hot system for about 1 minute. When the instant hot system tank is full, water will flow from faucet. Turn faucet off and check for leaks.

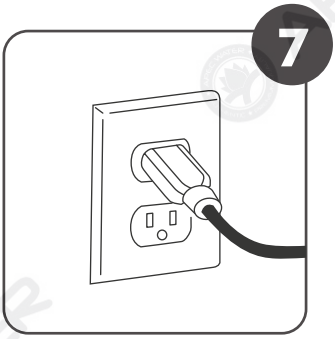

Step 7: Prepare for power

Important: Fill tank with water FIRST before plugging the tank power cord into an electrical outlet.

Plug electrical cord into a grounded 3-prong outlet. **DO NOT** use an outlet controlled by an off/on wall switch.

Double check to make sure the thermostat control dial is in the OFF position.

Note: Thermostat control dial controls the water temperature, not the water flow or delivery.

Step 8: Setting the temperature

Turn thermostat control dial clockwise to the highest position. Maximum temperature will be reached in about 15 minutes and dispenser will be ready for use. Lower the temperature setting by turning thermostat control dial counterclockwise if you notice vapor or a boiling noise.

Note: At the **LOW** setting of thermostat dial water temperature will be approximately 140°F and at the **HIGH** setting will be approximately 200°F.

IMPORTANT SAFETY INSTRUCTIONS

PLEASE READ ALL INSTRUCTIONS VERY CAREFULLY

When using eletrical appliances, basic safety precautions should always be followed including the following:

1. Read all instructions.
2. To protect against eletrical shock, do not place cord, plugs, or appliance in water or other liquid.
3. Do not operate any appliance with a damaged cord or plug, or after the appliance malfunctions. Return appliance to the factory for examination, repair or adjustment. See Warranty insert.
4. Do not use outdoor or in damp area.
5. Do not let cord hang over edge of table or counter, or touch hot surfaces.
6. Do not use appliance for other than intended household use.
7. When using this appliance, provide 4 to 6 inches of air space around the entire unit for air circulation.
8. Do not attempt to service this product. Repairs should be done by authorized service personnel.
9. Do not let children operate. The water can cause severe burns.

SAVE THESE INSTRUCTIONS. THIS PRODUCT FOR HOUSEHOLD USE ONLY.

The alert symbols displayed at right point to important safety information to make you aware of potential hazards that can cause serious injury or death. Please pay special attention to the information following these alerts and warnings. Failure to comply with these instructions can result in property damage, serious injury or death.

WARNING

DANGER

ELECTRICAL REQUIREMENTS

Recommended Ground Method

For your personal safety, the hot water dispenser is equipped with a power supply cord having a 3-prong ground plug. To minimize possible shock hazard, the cord must be plugged into a mating 3-prong, ground-type outlet, grounded in accordance with the National Electrical Code, ANSI/NFPA 70 – latest edition* or CSA Standard C22.1, Canadian Electrical Code, Part 1, – latest edition** and all local codes and ordinances.

If a mating outlet is not available, it is the personal responsibility and obligation of the customer to have a property grounded, 3-prong outlet installed by a qualified electrician.

Copies of the standards listed may be obtained from:

* National Fire Protection Association
One Batterymarch Park
Quincy, MA 02269

**CSA International
178 Rexdale Boulevard
Toronto, Ontario M9W1R3

If codes permit and a separate ground wire is used, it is recommended that a qualified electrician determine that the ground path is adequate.

A 120 volt, 60 Hz, AC only 15 or 20 ampere fused, grounded electrical supply is required. it is recommended that a separate circuit serving only your hot water dispenser be provided.

WARNING

Electrical Shock Hazard

Plug into a ground 3 prong outlet.

Do not remove ground prong.

Do not use an adapter.

Do not use an extension cord.

Failure to follow these instructions can result in death, fire or electrical shock.

NOTE: Use an outlet that cannot be turned on/off by a switch.

CLEANING AND MAINTENANCE

Seasonal Shutdown

To prevent damage when dispenser is exposed to freezing temperatures, water must be drained.

1. Unplug dispenser tank to power supply.
2. Turn thermostat control dial to OFF position (fully counterclockwise).
3. Turn faucet on and run water until water is cold.
4. Place a 3-quart (2.8 L) container under frain plug at bottom of the tank. Use a screwdriver to remove the screw and O-ring in the drain tube opening. When tank is fully drained replace O-ring and screw. Tighten to reseal the drain.

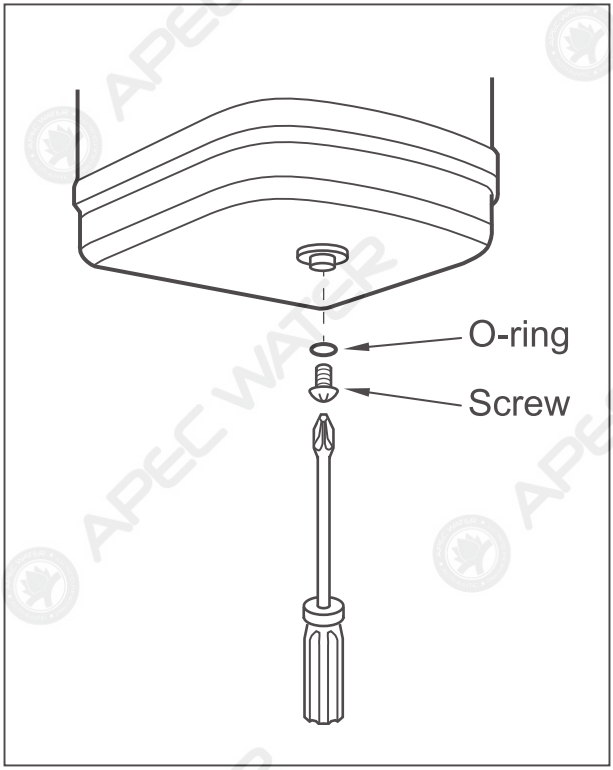

TROUBLESHOOTING

The following situations are not covered by the One Year Warranty.

1. Water is not hot: (assuming cold water supply is connected properly and valve is open)
   - Check if dispenser is plugged in.
   - Turn thermostat control dial fully clockwise. This may produce boiling water in approximately 15 mintues and possibly be accompanied by a gurgling sound in the tank and/or water "sputtering" from the faucet. If the water boils, turn thermostat control dial slightly counterclockwise until the gurgling and/or "sputtering" stops. This should take place within 20 seconds. Turn control dial an additional 1/8" (3mm) counterclockwise at the tip of the dial. Wait 15 minutes and check the temperature of the water.

     NOTE: Water temperature is measured at the faucet discharge, not in a vessel.
   - Check for blown fuse or circuit breaker is tripped (also see IMPORTANT NOTE explaining the self re-setting thermal fuse in step 6 of installation).

NOTE: The thermostat activates the heater after water temperature in the tank drops approximately 15°F (8°C) from the maximum setting. The dispenser does not produce a continuous flow of hot water.

2. Hot water drips or sputters from faucet:
   - Turn thermostat control dial counterclockwise (see item 1).
   - Check that the hose connecting the faucet to the dispenser tank is not clogged, twisted or kinked.
   - If quick-connect fitting is connecting cold water supply, check for a clogged filter screen in quick-connect fitting (see CLEANING AND MAINTENANCE of faucet manual).
   - Check for proper installation of copper tubing from faucet to dispenser tank and faucet to water line. If connected backwards or cross-connected, valve may be damaged. Refer to Step 4 in this manual.

NOTE: If a water filter is connected to the inlet line, change the filter element at recommended intervals or more often.

3. Water does not flow right away or at all:
   - Due to high temperature and for safety reasons, the tank is not under pressure causing a slight delay in water flow.
   - Make sure all valves on water supply are open.
   - Check if quick-connect filter screen or faucet filter screen is clogged (see faucet manual).
   - Check water lines to assure that hoses/tubes are not kinked or twisted.

4. Water boils or vapor appears:
   - Lower temperature setting by turning thermostat control dial counterclockwise.

NOTE: If lowering the thermostat setting does not stop the boiling, unplug the power supply cord and contact customer service.

LIMITED PRODUCT WARRANTY

Scope

APEC takes pride in selling a superb line of products, including this Instant Hot System ("Product"). As such, APEC expressly warrants to the original purchaser that, for a period of one (1) year from the date of purchase, the Product will be reasonably free of defects in materials and workmanship. Within that one (1) year period from the original purchase, APEC will, at its option, repair or replace the Product without charge, or refund the cost of the Product, if the Product fails or does not perform as warranted solely due to a manufacturing defect within the warranty period, subject to the limitations and exclusions set forth in this Limited Product Warranty. This Limited Product Warranty only applies when the Product is used, stored, handled, fabricated and/or installed in the manner recommended by APEC in the Installation Instruction & Owner's Manual ("Manual").

Repair or Replacement

Repair or replacement during this one (1) year warranty shall include reasonable labor charges necessary to repair or replace the defective Product, but shall not include freight charges or any other local labor charges from third parties other than APEC, unless APEC expressly approves such charges in writing. During the entire one (1) year warranty, APEC's obligation to repair or replace shall further be limited to repair or replacement with the styles, models, products, colors, etc. of the Product that are available at the time of the repair or replacement, and shall be limited to the repair or replacement of only the specific Product that fails due to a manufacturing defect. Any repaired or replaced product shall also remain subject to the original one (1) year warranty from the date of the original purchase, and any repair or replacement shall not extend the original warranty period in any manner or start a new warranty period.

Conditions of Validity of this Limited Product Warranty

Even though the Product has extremely high endurance for operating conditions such as pH and optimum water pressure, THIS LIMITED PRODUCT WARRANTY SHALL ONLY BE VALID IF:

The Product is operated within the confines of the following standard operating conditions:

	Water Pressure	pH Range
Standard System	40- 85 psi	2-11
Permeate Low Pressure System	30- 85 psi	2-11
Booster Pumped System	0- 30 psi	2-11

Any information or suggestion by APEC with respect to the Product concerning applications, specifications or compliance with codes and standards is provided solely for your convenient reference and is made without any representation as to accuracy or suitability. You must verify and test the suitability of any information with respect to the Product for your specific application.

Non-Covered Defects

THIS LIMITED PRODUCT WARRANTY DOES NOT COVER DEFECTS CAUSED BY:

1. Improper storage, installation, maintenance, handling, use and/or alterations of the Product, including, but not limited to, non-compliance with the installation, maintenance and standard operation conditions stated in the Manual and this Limited Product Warranty.
2. Unreasonable use, unintended use, or misuse of the Product for something other than its intended purpose.
3. Use of replacement parts or other accessories that are not sold or manufactured by APEC for use with this particular Product.
4. Damage not resulting from manufacturing defects that occur while the Product is in the original purchaser's possession.
5. Installation of the Product with known or visible manufacturing defects at the time of installation.
6. Damage caused by freezing, flood, fire or Act of God.

CONDITIONS THAT RENDER THIS LIMITED PRODUCT WARRANTY VOID

THIS LIMITED PRODUCT WARRANTY SHALL BE VOID IF:

1. The Product is not operated in compliance with normal municipal water conditions for which the particular model of this Product is intended.

2. The person seeking to invoke the warranty is not the original purchaser. That is, this Limited Product Warranty only extends to original purchasers.

3. The product is purchased used. That is, this Limited Product Warranty only covers new products.

4. The Product is purchased from someone other than APEC or one of APEC's authorized dealers. This is because, unless the Product was sold by APEC or one of its authorized dealers, APEC cannot verify or guarantee the integrity or authenticity of the Product.

General Conditions

The warranties set forth herein are the only warranties made by APEC in connection with the product. APEC cannot and does not make any implied or express warranties with respect to the product, and disclaims all other warranties, including, but not limited to, any warranty of merchantability or fitness for a particular purpose. Products sold by APEC are sold only to the specifications specifically set forth by APEC in writing. Other than the limited product warranty set forth herein, APEC makes no other warranties, express or implied. APEC's sole obligation under this warranty shall be repair or replacement of a non-conforming product or parts of the product, or at the option of APEC, return of the product and a refund of the purchase price. Buyer assumes all risk whatsoever as to the result of the use of the product purchased, whether used singularly or in combination with any other products or substances.

No claim by the buyer/owner of any kind, including claims for indemnification, shall be greater in amount than the purchase price of the products in respect to which damages are claimed. In no event shall APEC be liable to buyer/owner in tort, contract or otherwise, for any special, indirect, incidental, consequential, reliance, statutory, special, punitive or exemplary damages, including, but not limited to, lost profits, loss of use, loss of time, inconvenience, damage to good will or reputation, or loss of data, even if advised of the possibility of such damages or such damages could have been reasonably foreseen, in connection with, arising out of, or as a result of, the sale, delivery, servicing, use or loss of use of the products sold hereunder, or for any liability of buyer to any third party with respect thereto.

Obtaining Warranty Coverage or General Inquiries

If coverage is available, you may obtain coverage under this Limited Product Warranty by providing APEC with proof of original purchase, and that you are the original purchaser. For service under this Limited Product Warranty, you must notify APEC by phone at 1-800-880-4808, by email at techsupport@freedrinkingwater.com, or in writing at 301 Brea Canyon Rd, City of Industry, CA 91789. In making the claim, please provide your name, address, phone number, a description of the product involved, and an explanation of the defect.

Advanced Purification Engineering Corp.
301 Brea Canyon Road
City of Industry, CA 91789

For questions or comments please visit our website at:

www.FreeDrinkingWater.com

For technical support contact us at:

Techsupport@freedrinkingwater.com
1-800-880-4808